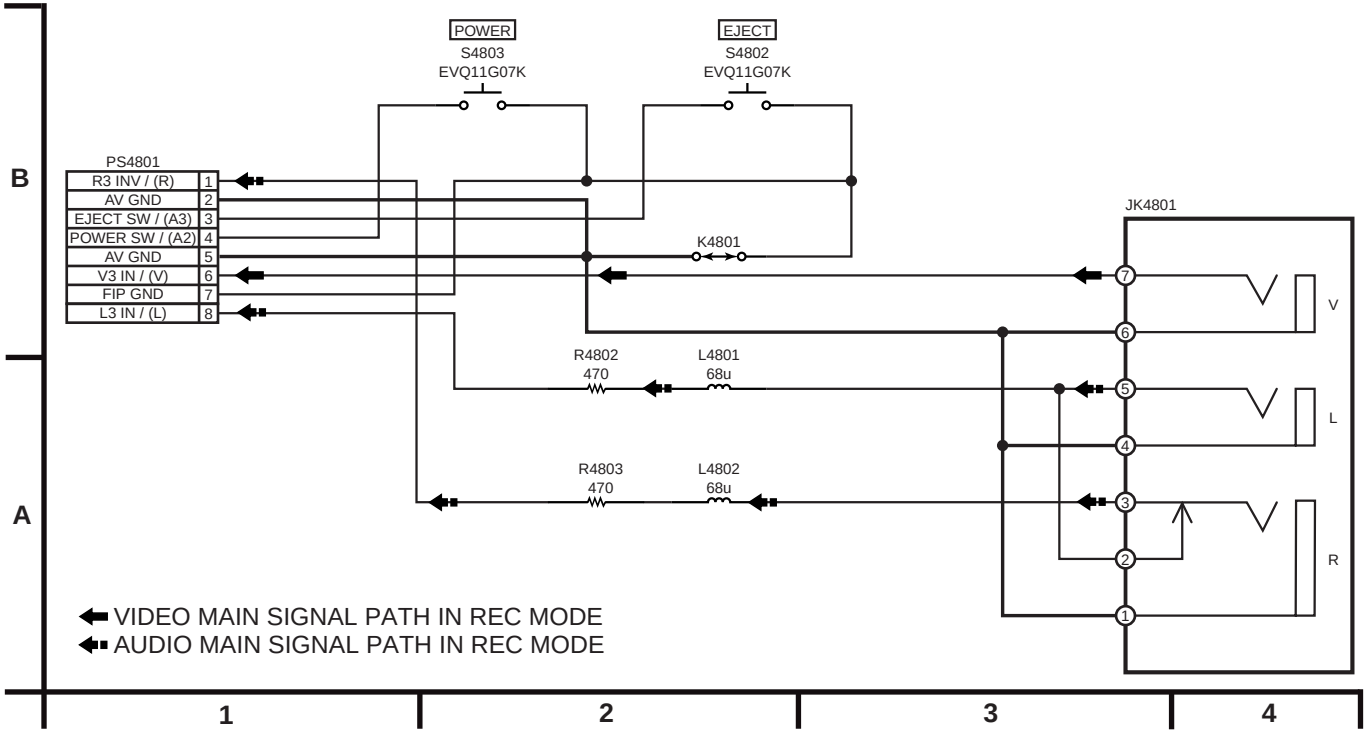
POWER
S4803
EVQ11G07K
EJECT
S4802
EVQ11G07K
PS4801
R3 INV / (R) 1
AV GND 2
EJECT SW / (A3) 3
POWER SW / (A2) 4
AV GND 5
V3 IN / (V) 6
FIP GND 7
L3 IN / (L) 8
K4801
JK4801
R4802
470
L4801
68u
R4803
470
L4802
68u
V
L
R
VIDEO MAIN SIGNAL PATH IN REC MODE
AUDIO MAIN SIGNAL PATH IN REC MODE
B
A
1
2
3
4