MAIN SIGNAL PATH IN REC MODE | MAIN SIGNAL PATH IN PLAYBACK MODE | CAPSTAIN SERVO PHASE LOOP | CAPSTAIN SERVO SPEED LOOP | CYLINDER SERVO PHASE LOOP | CYLINDER SERVO SPEED LOOP

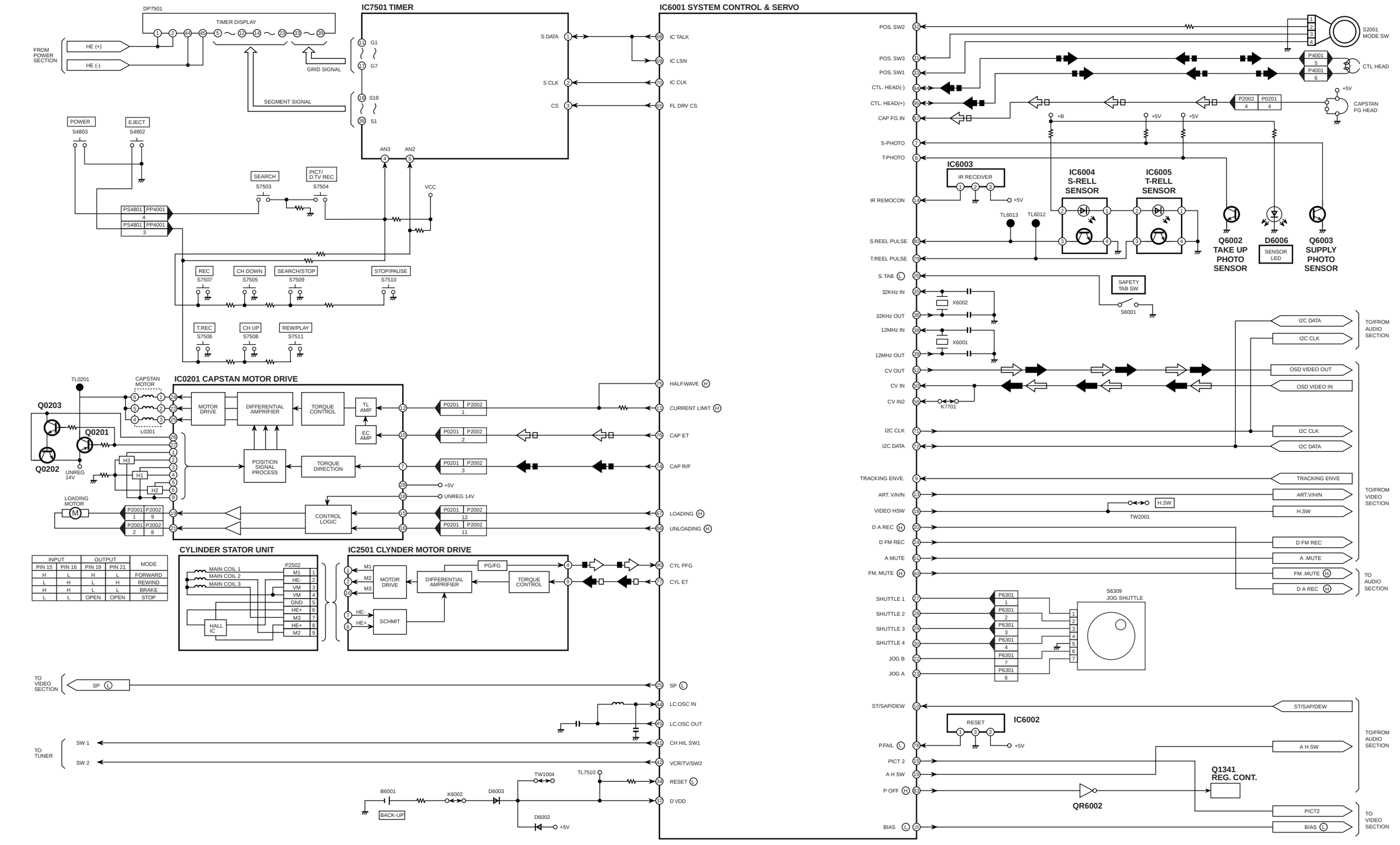

INPUT		OUTPUT		MODE
PIN 15	PIN 16	PIN 19	PIN 21	
H	L	H	L	FORWARD
L	H	L	H	REWIND
H	H	L	L	BRAKE
L	L	OPEN	OPEN	STOP